GCSE Maths: Parallel lines (Higher): worksheet

GCSE Maths - Angles, Polygons and Symmetry - Higher - Lesson 17.4

Name: _____ Date: _____ Score: _____

26 questions. Write your answers in the spaces. Answers and step-by-step help are free at **websink.site/gcse/maths/ch17-angles-polygons-symmetry/higher/parallel-lines/**

Exercise 17D Parallel lines: alternate, corresponding and co-interior angles

Non-calculator

1 In the diagram the two horizontal lines are parallel. Work out the value of *x*. Give reasons for your answer.

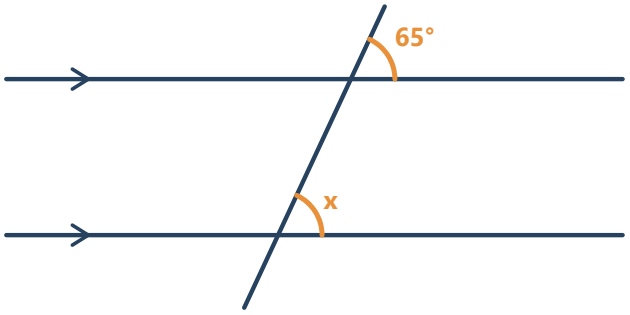

Answer:

2 In the diagram the two horizontal lines are parallel. Work out the value of *y*. Give reasons for your answer.

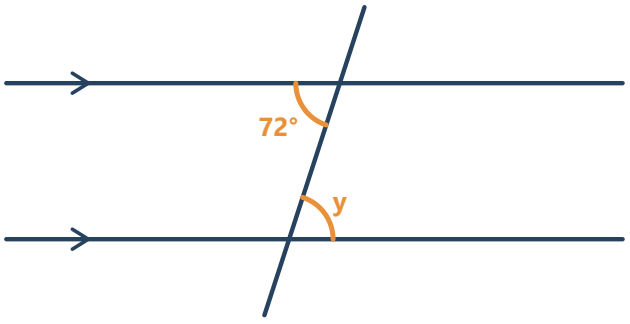

Answer:

3 In the diagram the two horizontal lines are parallel. Work out the value of *z*. Give reasons for your answer.

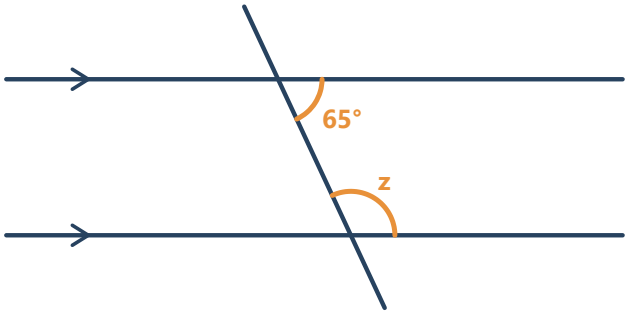

Answer:

4 In the diagram the two horizontal lines are parallel. Work out the value of *a*. Give reasons for your answer.

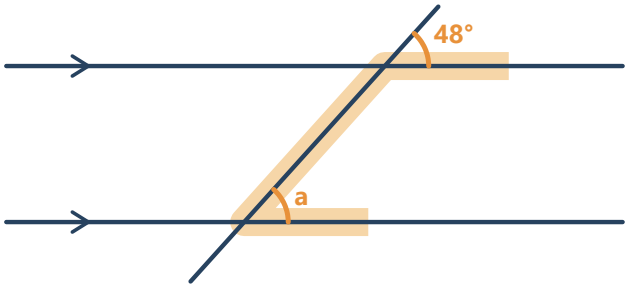

Answer:

5 In the diagram the two horizontal lines are parallel. Work out the value of *b*.

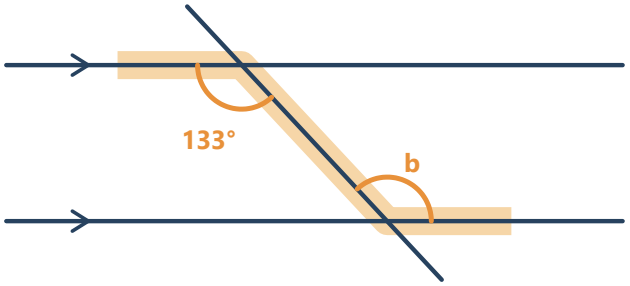

Answer:

6 In the diagram the two horizontal lines are parallel. Work out the value of *c*. Give reasons for your answer.

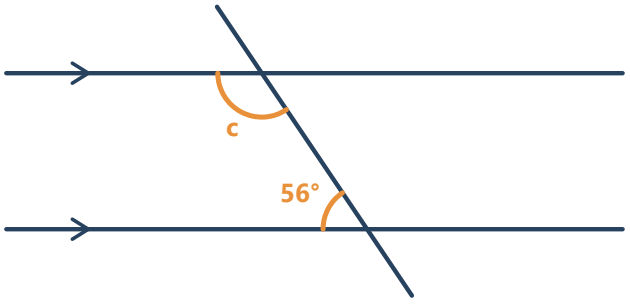

Answer:

7 In the diagram the two horizontal lines are parallel. Work out the value of *x*. Give reasons for your answer.

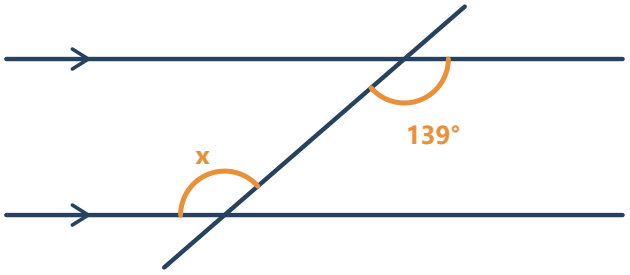

Answer:

8 In the diagram the two horizontal lines are parallel. Work out the value of *p*. Give reasons for your answer.

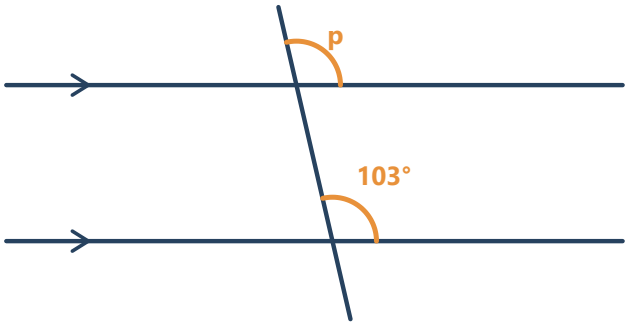

Answer:

9 In the diagram the two horizontal lines are parallel. Work out the value of *q*. Give reasons for your answer.

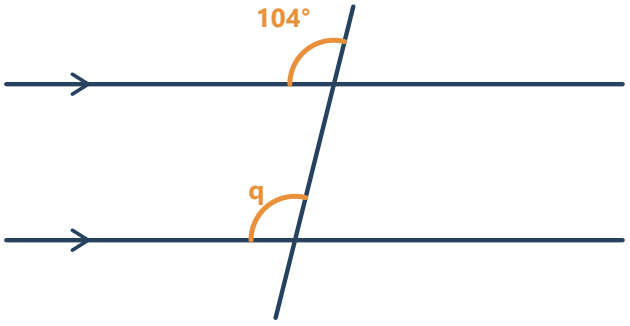

Answer:

10 In the diagram the two horizontal lines are parallel. Work out the value of *m*.

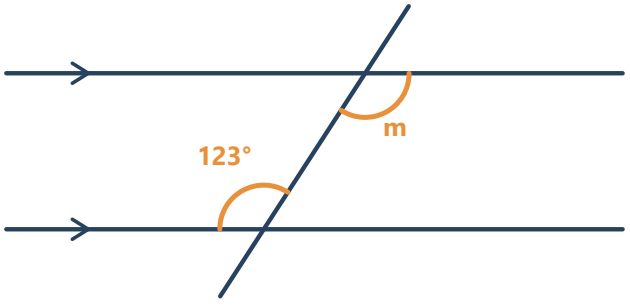

Answer:

11 The diagram shows two parallel lines and a transversal, with the angles labelled *a* to *h*.

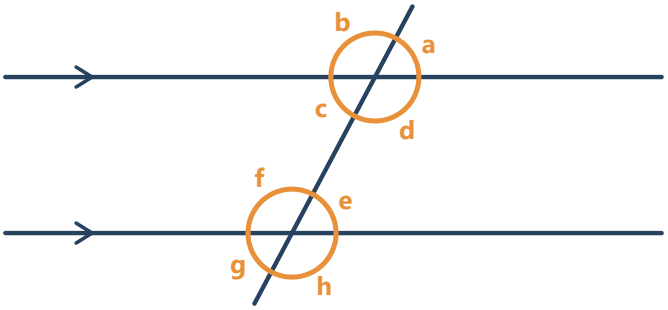

(a) angle *a*: corresponding

Answer:

(b) angle *c*: alternate

Answer:

(c) angle *d*: co-interior

Answer:

(d) angle *d*: corresponding

Answer:

(e) angle *d*: alternate

Answer:

(f) angle *c*: co-interior

Answer:

12 In the diagram of the eight angles (*a* to *h*), angle *a* = 62°. Work out the size of every other angle and give a reason for each.

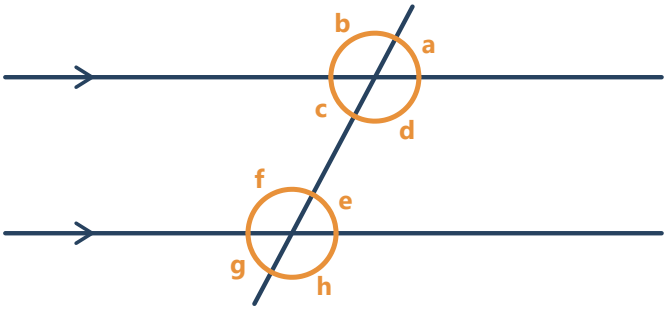

(a) angle *b*

Answer:

(b) angle *c*

Answer:

(c) angle *d*

Answer:

(d) angle *e*

Answer:

(e) angle *f*

Answer:

(f) angle *g*

Answer:

(g) angle *h*

Answer:

13 Write **true** or **false** and give a reason.

(a) Co-interior angles are always equal.

Answer:

(b) Alternate angles are equal when the lines are not parallel.

Answer:

14 Ali says that angle *x* is 110° because co-interior angles add up to 180°. Explain his mistake and give the correct value.

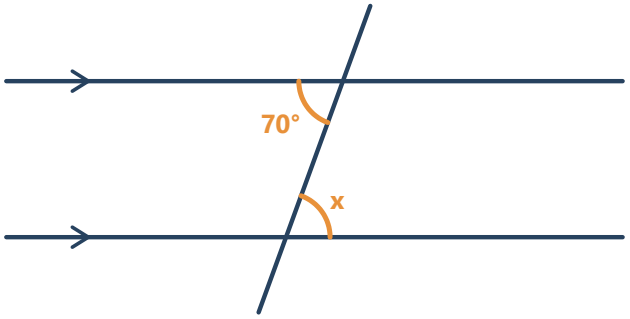

Answer:

15 The lines are parallel. The two marked angles are $(3x + 28)°$ and $(2x + 42)°$. Work out the value of *x*.

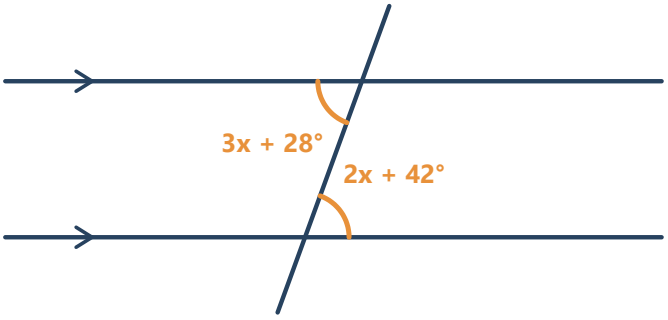

Answer:

16 The lines are parallel. The two marked angles are $(4x + 20)°$ and $(2x + 50)°$. Work out the value of *x*. Hence write down the size of each angle.

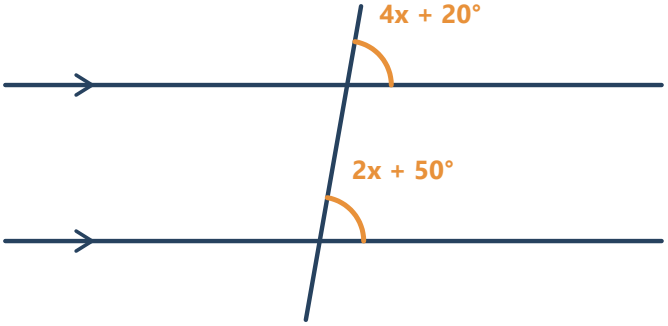

Answer:

17 The lines are parallel. The two marked angles are $(3x + 74)°$ and $(2x + 46)°$. Work out the value of x.

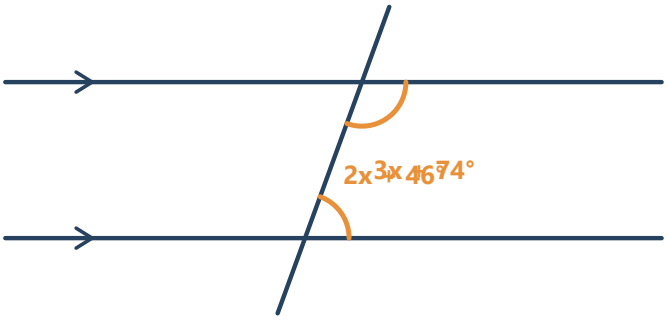

Answer:

18 Two parallel lines are crossed by a transversal. One of the angles is 90°. What can you say about all the other seven angles? Explain.

Answer:

Exercise 17E Parallel lines: multi-step angle problems and reasons Non-calculator

1 In the diagram the two horizontal lines are parallel. Work out the value of x. Give reasons for your answer.

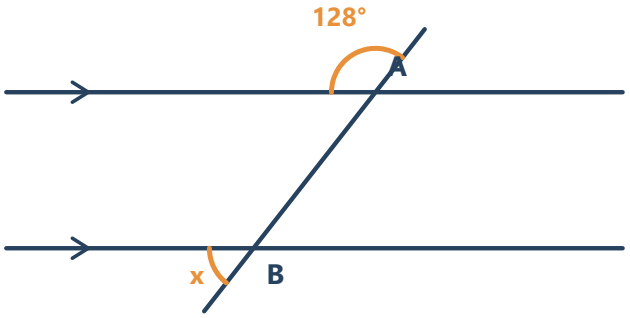

Answer:

2 In the diagram AB and CD are parallel (the arrows show this). Work out the size of angle y. Give reasons.

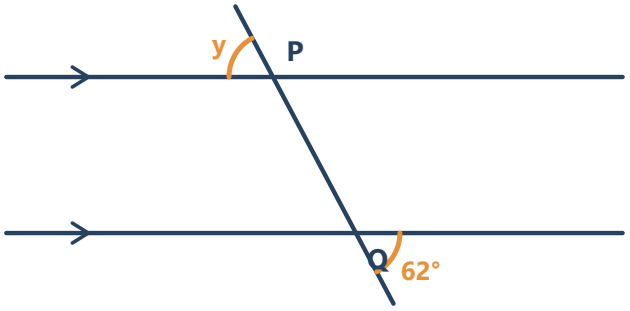

Answer:

3 In the diagram, PAQ is parallel to BC. Work out (a) the size of angle *x* (angle PAB), (b) the size of angle BAC. Give reasons.

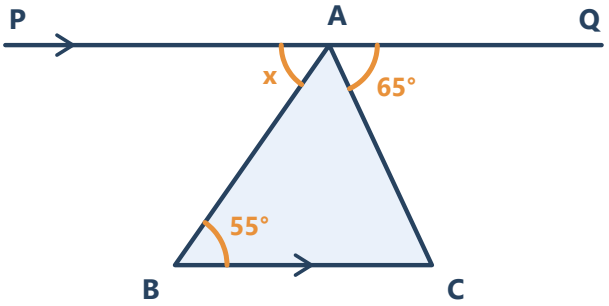

(a) Angle PAB

Answer:

(b) Angle BAC

Answer:

4 In the diagram, the horizontal lines through A and C are parallel. Work out the size of angle *x* (angle APC). Give reasons.

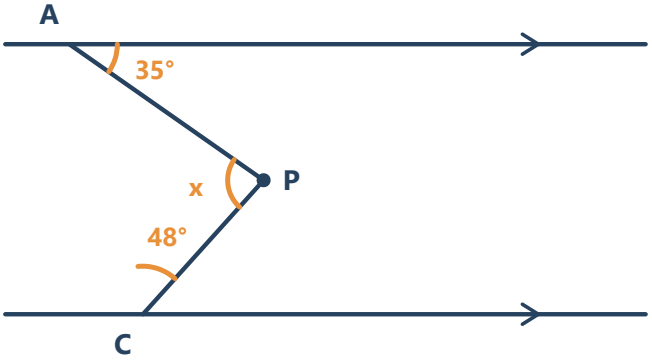

Answer:

5 In the diagram the horizontal lines are parallel. Work out the size of angle *x*. Give reasons.

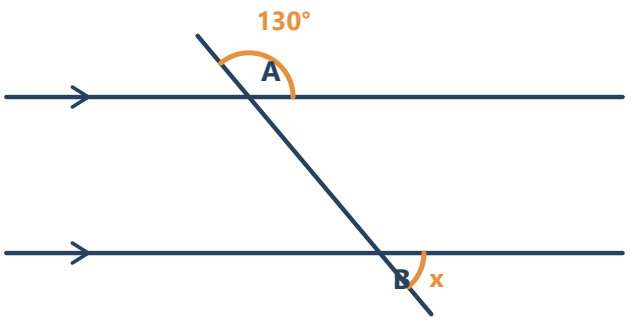

Answer:

6 The diagram shows two parallel lines and a point P between them. Write down the size of angle APC and explain how you know.

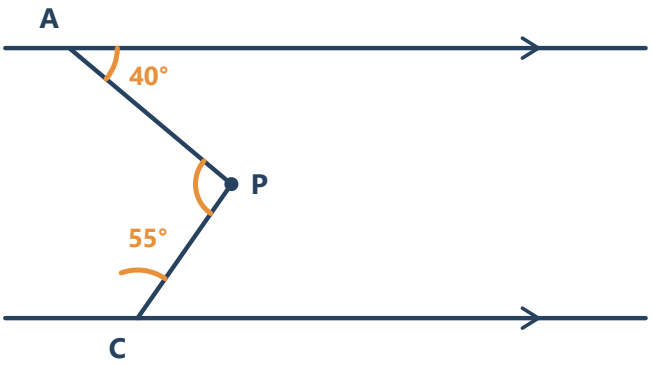

Answer:

7 ABC is a triangle. The line through A is parallel to BC. Prove that angles in the triangle add up to 180°.

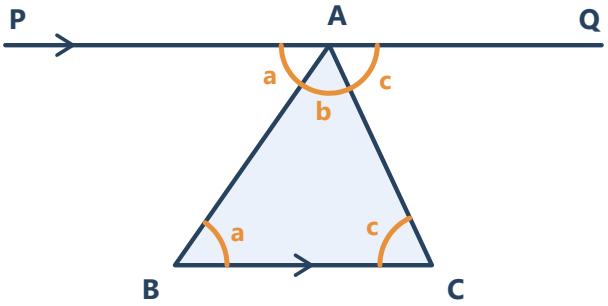

Answer:

8 In the diagram AB and CD are parallel. Work out the size of angle *x*. Give reasons for your working.

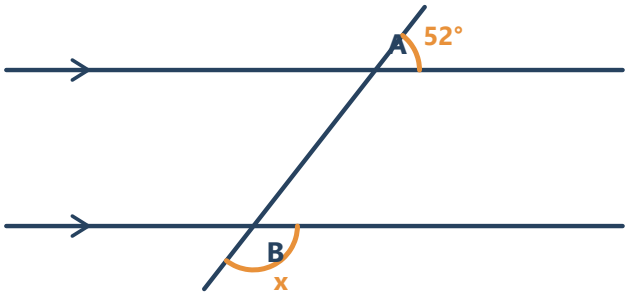

Answer:

© Websink Prep UK. Free for classroom and home use; please do not resell. websink.site