GCSE Maths: Circles: vocabulary and circumference (Foundation): answers

GCSE Maths - Perimeter, Area and Circles - Foundation - Lesson 18.6

Answers. Final answers to the worksheet questions. Full step-by-step solutions for every question are free at **websink.site/gcse/maths/ch18-perimeter-area-circles/foundation/circles-vocabulary-and-circumference/**

Exercise 18F Circles: vocabulary and circumference

Calculator allowed

1 Choose the correct word from: radius, diameter, chord, tangent, circumference, arc. Each description is about a circle.

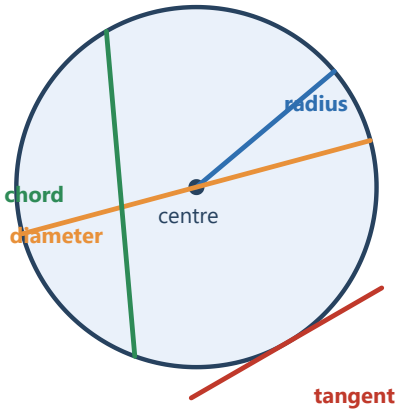

(a) the distance all the way round the circle

Answer: circumference

(b) a straight line from the centre to the edge

Answer: radius

(c) a straight line across the circle through the centre

Answer: diameter

(d) a straight line joining two points on the circle that does not have to go through the centre

Answer: chord

(e) a straight line that touches the circle at one point only

Answer: tangent

(f) part of the circumference

Answer: arc

2 The diagram shows a sector and a segment of a circle (in each, the shaded part is named). Which picture shows a sector? Which shows a segment? Give a reason for each.

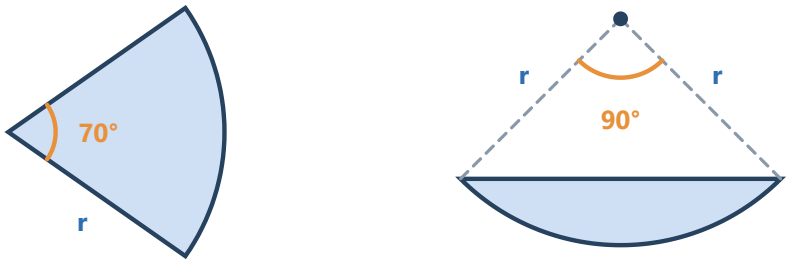

Answer: Left: sector. Right: segment.

3 Write down (a) the diameter of a circle with radius 6 cm, (b) the radius of a circle with diameter 15 cm.

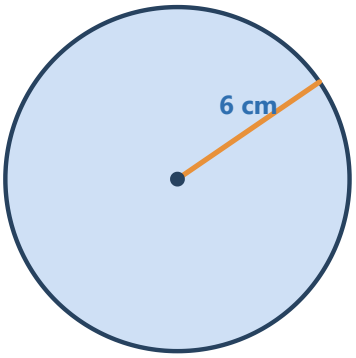

(a) diameter

Answer: 12 cm

(b) radius

Answer: 7.5 cm

4 Work out the circumference of the circle. Give your answer to 1 decimal place.

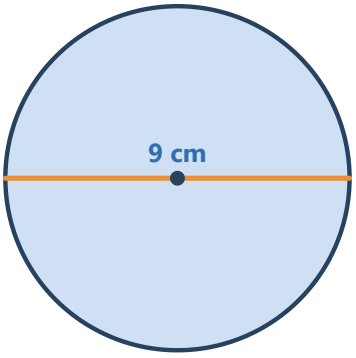

Answer: 28.3 cm

5 Work out the circumference of the circle. Give your answer to 1 decimal place.

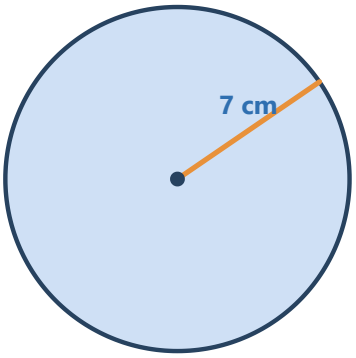

Answer: 44.0 cm

6 Work out the circumference of the circle. Give your answer (a) in terms of π and (b) to 1 decimal place.

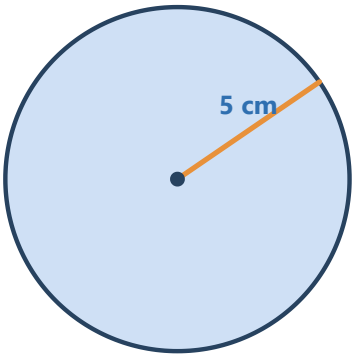

(a) in terms of π

Answer: 10π cm

(b) 1 d.p.

Answer: 31.4 cm

7 Work out the circumference of the circle. Give your answer in terms of π.

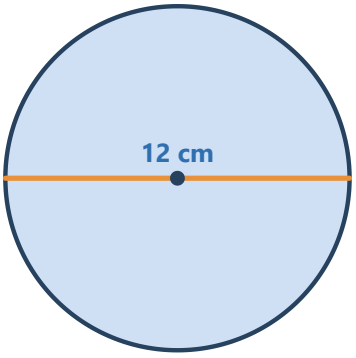

Answer: 12π cm

8 Work out the circumference of a circle with radius 12.5 cm. Give your answer to 3 significant figures.

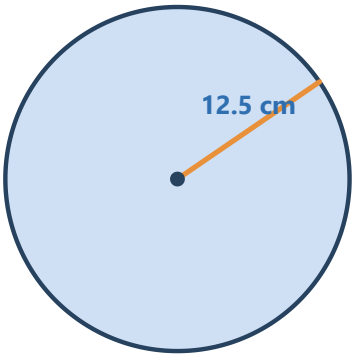

Answer: 78.5 cm

9 Estimate the circumference of this circle by using $\pi \approx 3$. Then use your calculator to find it to 1 decimal place.

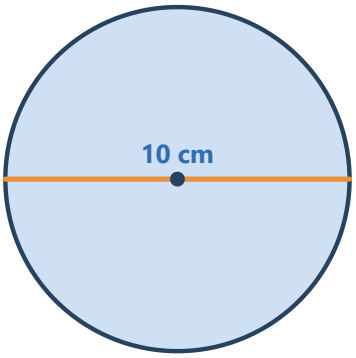

(a) estimate

Answer: 30 cm

(b) calculator

Answer: 31.4 cm

10 Work out the perimeter of the semicircle. Give your answer to 1 decimal place.

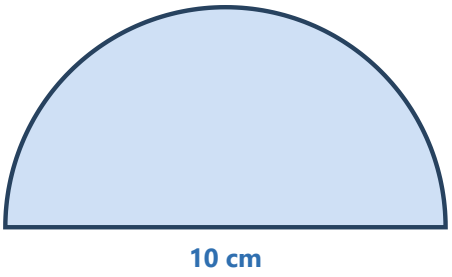

Answer: 25.7 cm

11 The shape is a quarter of a circle. Work out its perimeter (a) in terms of π and (b) to 1 decimal place.

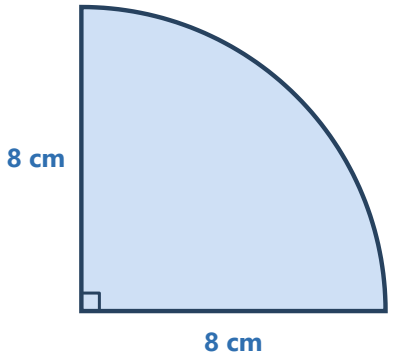

(a) in terms of π

Answer: (16 + 4π) cm

(b) 1 d.p.

Answer: 28.6 cm

12 The circumference of a circle is 26π cm. Work out its radius.

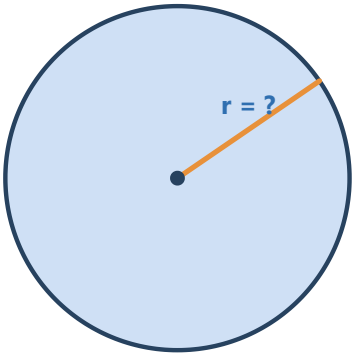

Answer: 13 cm

13 The circumference of a circle is 50 cm. Work out the radius. Give your answer to 2 decimal places.

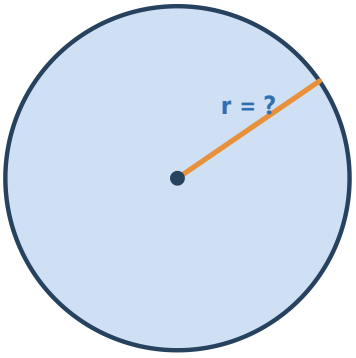

Answer: 7.96 cm

14 A bicycle wheel has a diameter of 70 cm. (a) Work out the circumference of the wheel to 3 significant figures. (b) How many complete turns must the wheel make to travel at least 1 km?

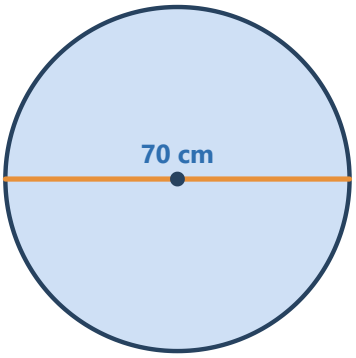

(a) circumference

Answer: 220 cm

(b) turns for 1 km

Answer: 455 turns

15 A circular pond has diameter 3.5 m. A fence goes all the way round it. Fencing costs £9 per metre. Work out the cost of the fence, to the nearest penny.

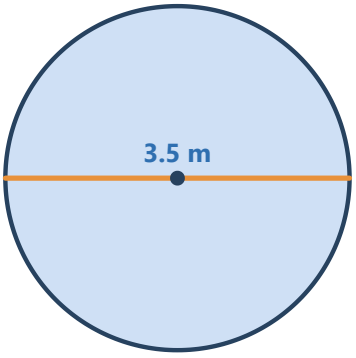

Answer: £98.96

16 Sam says: "A circle with radius 5 cm has circumference 5π cm." Explain his mistake and give the correct circumference in terms of π.

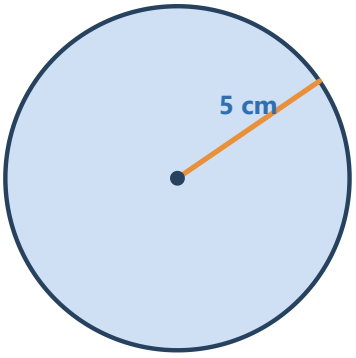

Answer: He used πr; the correct answer is 10π cm

17 A circle has diameter 10 cm. A square has sides of 8 cm. Which has the bigger perimeter (circumference)? Show your working.

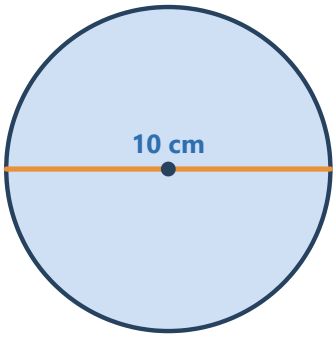

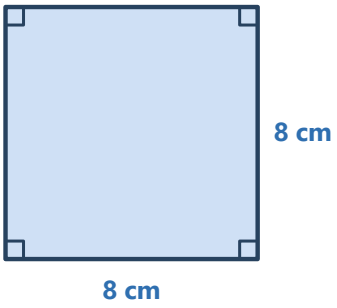

Answer: The square (32 cm compared with 31.4 cm)

18 **Anna ties string round the middle of a tin. The tin has diameter 7 cm and the string is 22 cm long. Work out the circumference ÷ diameter. What does the answer show?**

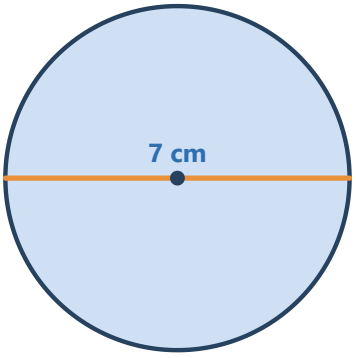

Answer: 22 ÷ 7 = 3.14… (about π)

© Websink Prep UK. Free for classroom and home use; please do not resell. websink.site