GCSE Maths: Surface area of cuboids, prisms and cylinders (Higher): answers

GCSE Maths - Volume, Surface Area and 3D Shapes - Higher - Lesson 19.7

Answers. Final answers to the worksheet questions. Full step-by-step solutions for every question are free at **websink.site/gcse/maths/ch19-volume-surface-area-3d/higher/surface-area-of-cuboids-prisms-and-cylinders/**

Exercise 19H Surface area (non-calculator) Non-calculator

1 Work out the surface area of each cuboid.

(a) 5 cm by 4 cm by 3 cm

Answer: 94 cm^2

(b) 6 cm by 6 cm by 2 cm

Answer: 120 cm^2

(c) 10 cm by 3 cm by 2 cm

Answer: 112 cm^2

(d) 4 cm by 3 cm by 2.5 cm

Answer: 59 cm^2

2 Work out the surface area of each cube.

(a) edge 4 cm

Answer: 96 cm^2

(b) edge 7 cm

Answer: 294 cm^2

(c) edge 10 mm

Answer: 600 mm^2

3 An open box with no lid is a cuboid 20 cm long, 15 cm wide and 10 cm high. Work out the outside surface area.

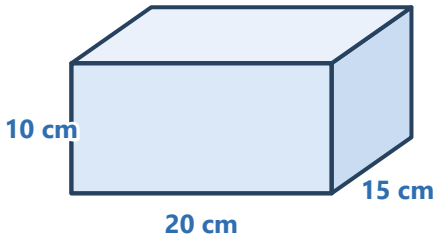

Answer: 1000 cm^2

4 The diagram shows a triangular prism. The triangle is right-angled. Work out the total surface area.

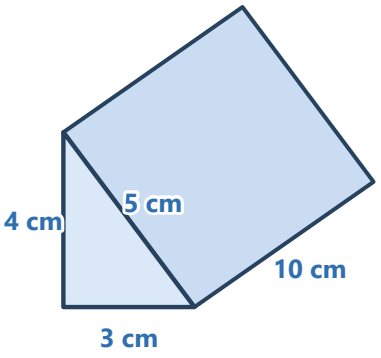

Answer: 132 cm^2

5 The triangular ends of this prism are isosceles. Work out the total surface area.

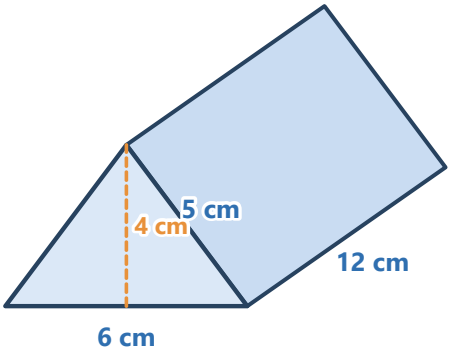

Answer: 216 cm^2

6 The cross-section of this prism is a trapezium. Work out the total surface area.

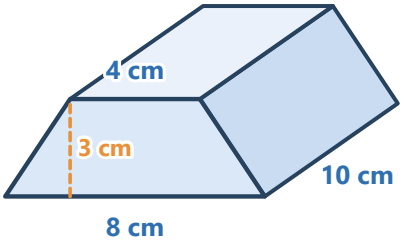

Answer: 256 cm^2

7 Work out the total surface area of this prism, which has an L-shaped cross-section.

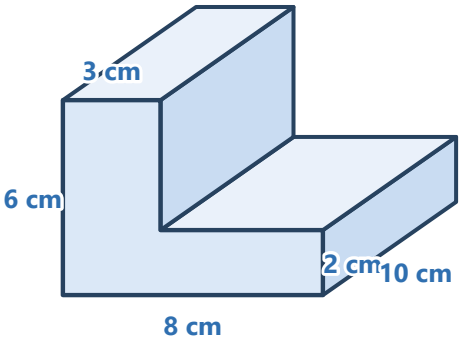

Answer: 336 cm^2

8 Work out the total surface area of each cylinder. Give your answers in terms of π.

(a) radius 3 cm, height 10 cm

Answer: 78π cm^2

(b) diameter 8 cm, height 5 cm

Answer: 72π cm^2

(c) radius 5 cm, height 2 cm

Answer: 70π cm^2

9 Work out the curved surface area of each cylinder, in terms of π.

(a) radius 4 cm, height 10 cm

Answer: 80π cm^2

(b) radius 3 cm, height 7 cm

Answer: 42π cm^2

10 An open tin has no lid. It is a cylinder with radius 5 cm and height 12 cm. Work out the outside surface area, in terms of π.

Answer: 145π cm^2

11 A gift box is a cuboid 30 cm by 20 cm by 10 cm. It is covered completely with wrapping paper. Sheets of paper are 50 cm by 40 cm. How many sheets are needed? (Assume no overlap and that the paper can be cut and joined.)

Answer: 2 sheets

12 An open water tank is a cuboid 2 m long, 1.5 m wide and 1 m high. The five outside faces are painted. Paint costs £4 per square metre. Work out the cost.

Answer: £40

13 The total surface area of a cube is 216 cm^2. Work out the length of an edge.

Answer: 6 cm

14 A cube has edge 6 cm. A cuboid measures 9 cm by 6 cm by 4 cm. Show that they have the same volume. Which has the smaller surface area?

Answer: Both volumes are 216 cm^3. The cube has the smaller surface area (216 cm^2 compared with 228 cm^2).

15 **Tom says that the total surface area of a cylinder with radius 3 cm and height 10 cm is 60π cm^2. Explain his mistake and work out the correct total surface area.**

Answer: Tom left out the two circles. Correct answer: 78π cm^2

16 **A cuboid 6 cm by 4 cm by 3 cm is cut in half horizontally to make two identical cuboids, each 6 cm by 4 cm by 1.5 cm. Show that the total surface area increases by 48 cm^2.**

Answer: Increase = 48 cm^2

17 **Two cubes with edges 2 cm are stuck together face to face to make a cuboid 4 cm by 2 cm by 2 cm. Work out the surface area of the cuboid, and explain why it is less than the total surface area of the two separate cubes.**

Answer: 40 cm^2. Two faces (8 cm^2) are hidden.

18 **A cylinder has radius 5 cm and total surface area 150π cm^2. Work out its height.**

Answer: 10 cm

19 **Show that for any prism the total surface area can be written as $2A + PL$, where A is the area of the cross-section, P its perimeter and L the length of the prism.**

Answer: SA = 2A + PL

Exercise 19I Surface area of cylinders (calculator) Calculator allowed

1 **Work out the total surface area of each cylinder. Give your answers to 3 significant figures.**

(a) radius 4 cm, height 10 cm

Answer: 352 cm^2

(b) radius 2.5 cm, height 7.2 cm

Answer: 152 cm^2

(c) diameter 12 cm, height 15 cm

Answer: 792 cm^2

2 **An open cylinder (no lid) has radius 6 cm and height 14 cm. Work out the outside surface area to 1 decimal place.**

Answer: 640.9 cm^2

3 **A tin of soup is a cylinder of diameter 7.4 cm and height 10.8 cm. The paper label covers the curved surface only. Work out the area of the label, to 3 significant figures.**

Answer: 251 cm^2

4 **An open cylindrical tank has radius 0.8 m and height 1.5 m. The outside (base and curved surface) is painted. One litre of paint covers 4 m^2. How many litres of paint are needed, to the nearest litre?**

Answer: 3 litres

5 **A cylinder has radius 3 cm and height 8 cm. Work out the ratio of the curved surface area to the total surface area, in its simplest form.**

> **Answer:** 48 : 66 = 8 : 11

6 **The surface area of a closed cylinder is 400 cm^2 and its radius is 5 cm. Work out the height to 3 significant figures.**

> **Answer:** 7.73 cm

© Websink Prep UK. Free for classroom and home use; please do not resell. websink.site