GCSE Maths: Volume of prisms (Higher): answers

GCSE Maths - Volume, Surface Area and 3D Shapes - Higher - Lesson 19.5

Answers. Final answers to the worksheet questions. Full step-by-step solutions for every question are free at **websink.site/gcse/maths/ch19-volume-surface-area-3d/higher/volume-of-prisms/**

Exercise 19E Volume of prisms

Non-calculator

1 Work out the volume of each triangular prism.

(a)

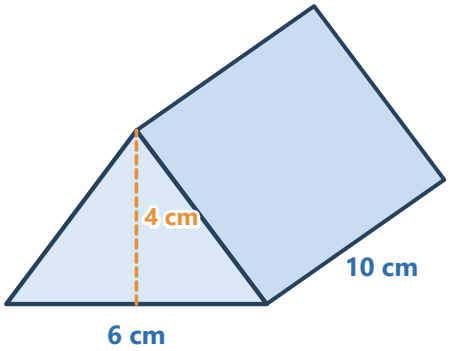

Answer: 120 cm^3

(b)

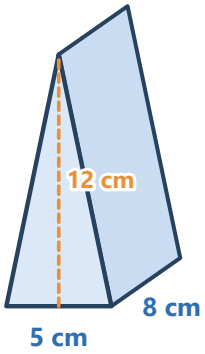

Answer: 240 cm^3

(c)

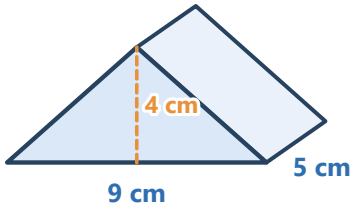

Answer: 90 cm^3

2 Work out the volume of each prism. The cross-section is a trapezium.

(a)

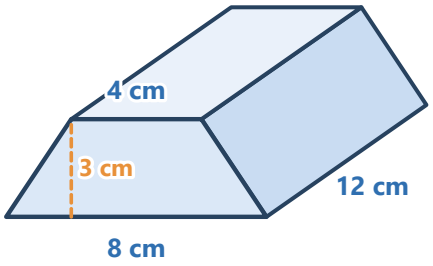

Answer: 216 cm^3

(b)

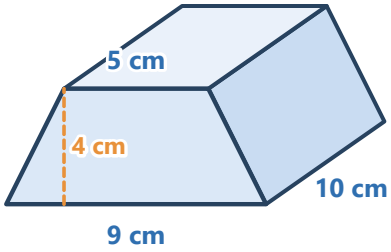

Answer: 280 cm^3

3 The cross-section of this prism is a parallelogram. Work out the volume.

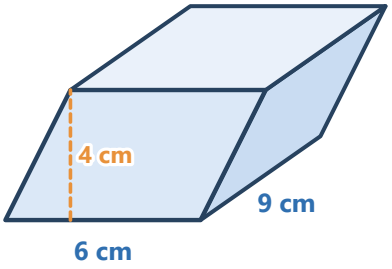

Answer: 216 cm^3

4 Work out the volume of each prism. The cross-section is an L-shape.

(a)

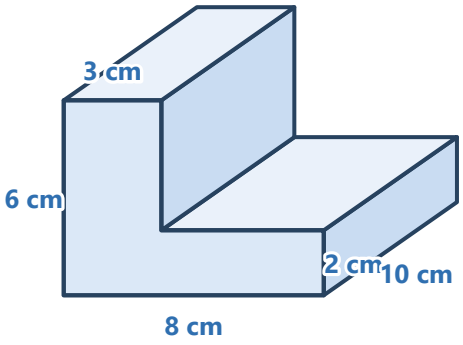

Answer: 280 cm^3

(b)

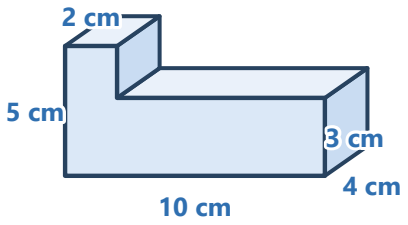

Answer: 136 cm^3

5 **Work out the length of each prism.**

(a) A triangular prism has a triangle of base 6 cm and height 4 cm. Its volume is 180 cm^3.

Answer: 15 cm

(b)

A prism has a trapezium cross-section with parallel sides 4 cm and 8 cm, 3 cm apart. Its volume is 216 cm^3.

Answer: 12 cm

6 **Work out the height of the triangular cross-section of each prism.**

(a) Base 6 cm, prism length 10 cm, volume 150 cm^3.

Answer: 5 cm

(b) Base 8 cm, prism length 5 cm, volume 160 cm^3.

Answer: 8 cm

7 **A tent is a triangular prism. The triangular ends have base 3 m and height 2 m, and the tent is 4 m long. Each person needs 2.5 m^3 of air. What is the greatest number of people who can sleep in the tent?**

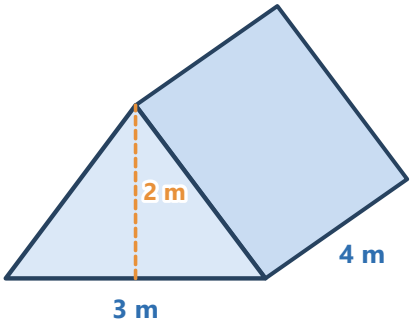

Answer: 4 people

8 **A water trough is a triangular prism. The triangle has base 40 cm and perpendicular height 30 cm, and the trough is 100 cm long. Work out the capacity of the trough in litres.**

Answer: 60 litres

9 **The diagram shows a swimming pool. The pool is 20 m long and 8 m wide. The depth is 1 m at the shallow end and 3 m at the deep end, and the floor slopes steadily. The cross-section from the shallow end to the deep end is a trapezium.**

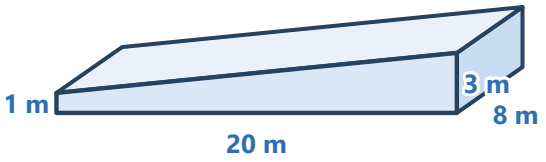

(a) Work out the volume of the pool in m^3.

Answer: 320 m^3

(b) How many litres of water are needed to fill the pool?

Answer: 320,000 litres

10 **Show that a triangular prism with a triangle of base 8 cm and height 6 cm and length 10 cm has the same volume as a cuboid that is 5 cm by 6 cm by 8 cm.**

Answer: Both volumes are 240 cm^3

11 **Sam works out the volume of a triangular prism with a triangle of base 6 cm and height 4 cm, and a length of 10 cm. He writes $6 \times 4 \times 10 = 240$ cm^3. What mistake has he made? What is the correct volume?**

Answer: He forgot the ½ for the triangle. Volume = 120 cm^3

12 **A triangular prism has a triangle with base *b* cm and height *h* cm, and the prism has length *L* cm. Write what happens to the volume when (a) *L* is doubled, (b) *b* is doubled, (c) *b* and *h* are both doubled.**

(a) *L* doubled

Answer: Volume doubles

(b) *b* doubled

Answer: Volume doubles

(c) *b* and *h* both doubled

Answer: Volume is multiplied by 4

13 **The diagram shows a prism whose cross-section is an L-shape. The length of the prism is *x* cm and its volume is 330 cm^3. Work out *x*.**

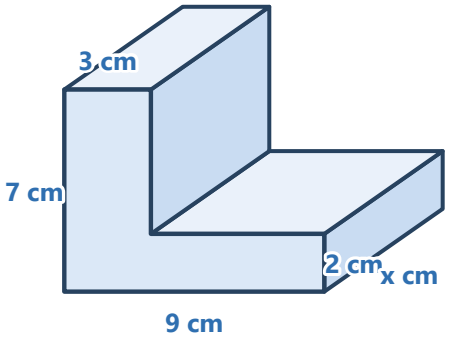

Answer: 10 cm

14 **A triangular prism has a triangular cross-section with base *x* cm and height 2*x* cm. The prism is 5 cm long. (a) Show that its volume is $5x^2$ cm^3. (b) The volume is 500 cm^3. Work out *x*.**

(a) Show that the volume is $5x^2$.

Answer: $5x^2$

(b) Work out x.

Answer: 10

15 **A cuboid-shaped prism has cross-section area 24 cm^2. A second triangular prism has the same length and its cross-section is a triangle of base 6 cm and height 4 cm. Write the ratio of the volume of the cuboid prism to the volume of the triangular prism, in its simplest form.**

Answer: 2 : 1

© Websink Prep UK. Free for classroom and home use; please do not resell. websink.site